Black Bear Corp

Master Distributor:

MBI Monzon Brothers, Inc

MBI Crane & Hoist

Material Handling Products and Services

PHONE: (504) 616-8789 / Toll Free: (877) 97 - HOIST
Fax: (504) 361-8689

www.blackbearhoist.com

www.mbicraneandhoist.com

E-mail: mbi@mbicraneandhoist.com

Revision of November, 2009

Due to the printing factors, the color of the products is subject to minor deviation from the physical objects.

The New Generation

Black Bear

ELECTRIC CHAIN HOIST

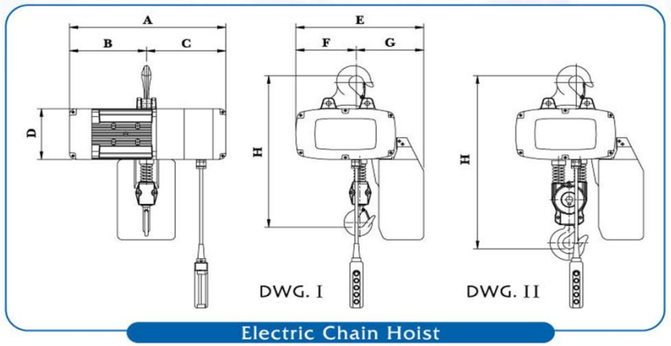

Electric Chain Hoist

Model	S.W.L (lbs)	STD. Lift Height (ft)	DWG	Dimensions(in)								Load Chain	Hoisting		Traversing		E.D. Rating (%)	Load Chain Fall No.	N.W./G.W. (lbs)
				A	B	C	D	E	F	G	H	Dia X pitch (mm)	Dual Speed (ft/min) 60Hz	Motor Power (HP) (Pole) 60Hz	Dual Speed (ft/min) 60Hz	Motor Power (HP) (Pole)			
NHD-025-1	550	10	I	15	6.9	8	5.3	11.8	5.6	6.1	14.8	Φ4.0 ×12.0	39.4/8.8	0.8/0.2 2/8P	78.8/19.7	0.16/0.04 2/8P	40/20	1	66/93
NHD-050-2	1100		II								17.8		19.7/4.4					2	71/97
NHD-050-1	1100	10	I	18.4	8.7	9.7	6.1	14.4	7.3	7.1	19.1	Φ6.3 ×19.1	32.8/8.2	1.5/0.37 2/8P	78.8/19.7	0.16/0.04 2/8P	40/20	1	93/126
NHD-100-2	2200		II								20.9		16.4/4.1			0.24/0.06 2/8P		2	99/132
NHD-100-1	2200	10	I	19.3	9.5	9.8	6.7	15.7	7.4	8.3	20.5	Φ7.1 ×20.2	26.2/6.5	2/0.5 2/8P	78.8/19.7	0.24/0.06 2/8P	40/20	1	126/170
NHD-200-2	4400		II								23.3		13.1/3.2			0.5/0.12 2/8P		2	137/181

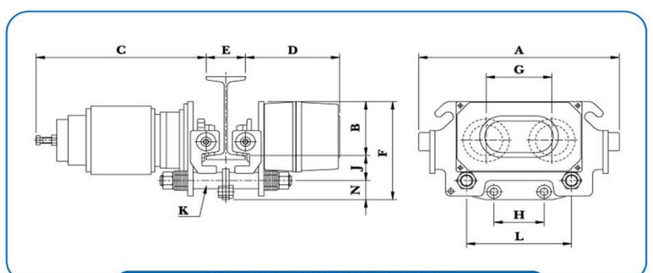

Motorized NT(D) Trolley

Model	Dimensions(in)												Motor (HP)	Speed (ft/min) 60Hz	N.W.(lbs)	Min radius of carve(in)
	A	B	C	D	E	F	G	H	L	J	N	K				
NT-050-1	15	4.4	12.8	7.1	3-5	8	4.9	3.8	7.9	2	1.5	7/8"-9UNC (Φ22.2)	0.16 2P	78.8	99	51.2
NTD-050-1													0.16/0.04 2/8P	78.8/19.7		
NT-050-2	15	4.4	12.8	7.1	3-5	8	4.9	4.7	7.9	2	1.6	7/8"-9UNC (Φ22.2)	0.16 2P	78.8	99	51.2
NTD-050-2													0.16/0.04 2/8P	78.8/19.7		
NT-100-1	15	4.4	12.8	7.1	3-5	8	4.9	4.7	7.9	2	1.5	7/8"-9UNC (Φ22.2)	0.24 2P	78.8	99	51.2
NTD-100-1													0.24/0.06 2/8P	78.8/19.7		
NT-100-2	15	4.4	12.8	7.1	3-5	8	4.9	3.8	7.9	2	1.5	7/8"-9UNC (Φ22.2)	0.24 2P	78.8	99	51.2
NTD-100-2													0.24/0.06 2/8P	78.8/19.7		
NT-200-2	15.4	4.9	14	7.2	4-6	8.7	6.3	4.7	9	2.4	1.4	1"-8UNC (Φ25.4)	0.5 2P	78.8	110	66.9
NTD-200-2													0.5/0.12 2/8P	78.8/19.7		

LGT · LPT

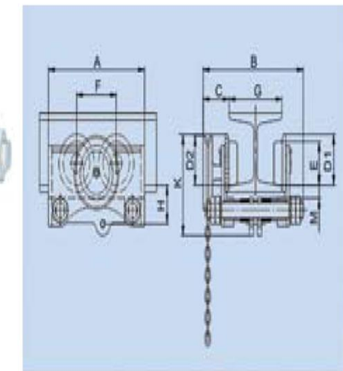

DIMENSIONS (Inch)														
Capacity	Model	A	B	C	D1	D2	E	F	H	K	M	G	NW/LBS	Min Radius Curve (Inch)
0.5	LGT-050	8.3	10.8	3.2	2.7	2.8	2.4	3.6	2.4	5.8	0.8	3"-6"	26.0	40"
1.0	LGT-100	9.5	11.4	3.3	3.0	3.2	2.8	3.9	2.5	6.3	0.8	3"-6"	33.0	40"
1.5	LGT-150	12.6	13.9	3.5	3.5	4.3	3.2	4.6	3.1	8.2	1.0	5"-7.9"	54.0	51"
2.0	LGT-200	12.6	13.9	3.5	3.5	4.3	3.2	4.6	3.1	8.2	1.0	5"-7.9"	54.0	51"
3.0	LGT-300	12.7	14.4	3.7	4.0	4.2	3.5	5.1	4.5	9.5	1.0	5"-7.9"	68.0	59"
5.0	LGT-500	14.3	14.9	3.8	4.6	4.5	3.9	5.9	4.8	10.5	1.2	5"-7.9"	94.0	63"

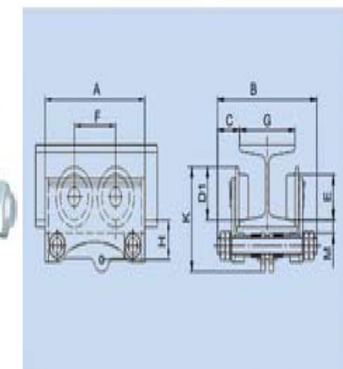

DIMENSIONS (Inch)														
Capacity	Model	A	B	C	D1	D2	E	F	H	K	M	G	NW/LBS	Min Radius Curve (Inch)
0.5	LPT-050	8.3	10.8	3.2	2.7	2.8	2.4	3.6	2.4	5.7	0.8	3"-6"	19.0	40"
1.0	LPT-100	9.5	11.4	3.3	3.0	3.2	2.8	3.9	2.4	6.2	0.8	3"-6"	24.0	40"
1.5	LPT-150	12.6	13.9	13.0	3.5	4.3	3.2	4.6	3.1	7.5	1.0	5"-7.9"	43.0	51"
2.0	LPT-200	12.6	13.9	13.0	3.5	4.3	3.2	4.6	3.1	7.5	1.0	5"-7.9"	43.0	51"
3.0	LPT-300	12.7	14.4	13.5	4.0	4.2	3.5	5.1	4.5	9.4	1.0	5"-7.9"	57.0	59"
5.0	LPT-500	14.3	14.9	14.2	4.6	4.5	3.9	5.9	4.8	10.5	1.2	5"-7.9"	83.0	63"

Black Bear

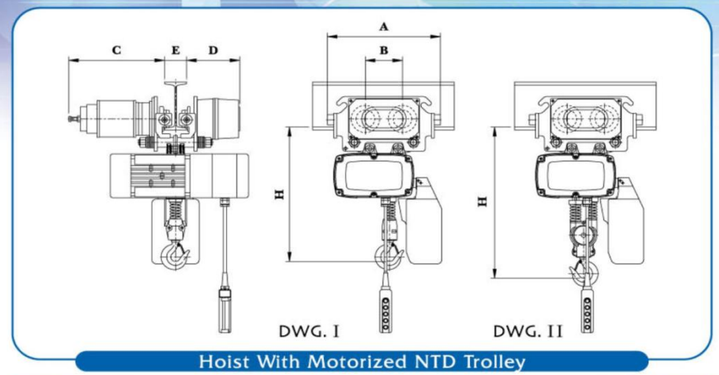

Hoist With Motorized NTD Trolley

Hoist Model	DWG.	Dimensions(in)						N.W./ G.W. (lbs)
		A	B	C	D	E	H	
NHD-025-1+NTD-050-2	I	15	4.9	12.8	7.1	3-5	15.2	150/185
NHD-050-2+NTD-050-2	II						18.2	158/194
NHD-050-1+NTD-050-1	I	15	4.9	12.8	7.1	3-5	19	176/216
NHD-100-2+NTD-100-2	II						21.3	198/238
NHD-100-1+NTD-100-1	I	15	4.9	12.8	7.1	3-5	20	233/288
NHD-200-2+NTD-200-2	II	15.4	6.3	14.1	7.2	4.6	22.9	244/299

■ CHAIN CONTAINER SELECTION TABLE

Model	#1	#2	#3	#4	#5	#6	#7	#8	#9	#10
	Max. Lift	Max. Lift	Max. Lift	Max. Lift	Max. Lift	Max. Lift	Max. Lift	Max. Lift	Max. Lift	Max. Lift
NHD-025-1	23'	40'	43'							
NHD-050-2	10'	20'			30'	40'				
NHD-050-1		20'	26'	40'			43'			
NHD-100-2		10'	13'	20'			30'	40'		
NHD-100-1			23'	40'					43'	
NHD-200-2			10'	20'				30'		40'

*Remember to change bucket if the length of chain increased.

■ Bucket Size

Bucket No.	Bucket Size (in)
#1	3.5x5.1x7.3
#2	4.7x6.3x9.1
#3	5.5x7.1x10.6
#4	7.1x9.8x12.6
#5	4.7x6.3x10.2
#6	5.1x6.7x12.2
#7	6.3x9.1x15
#8	7.1x9.4x16.5
#9	6.7x9.8x15
#10	7.1x9.8x18.5

Hoist Classification

Load Spectrum	Cubic mean value	Avg. daily operating time (hr)	0.25<x ≦0.5	0.5<x ≦1	1<x ≦2	2<x ≦4	4<x ≦8	8<x ≦16
		Total operating time (hr)	400<x ≦800	800<x ≦1600	1600<x ≦3200	3200<x ≦6300	6300<x ≦12500	12500<x ≦25000
1 Light	K≦0.50	When normally working with approx. 1/3 of W.L.L. and are rarely with W.L.L.	1Dm	1Cm	1Bm	1Am	2m	3m
2 Medium	0.50<K≦0.63	When normally working with approx. 1/3 to 2/3 of W.L.L. and sometimes with W.L.L.	1Cm	1Bm	1Am	2m	3m	4m
3 Heavy	0.63<K≦0.80	When normally working with approx. 2/3 of W.L.L. and often with W.L.L.	1Bm	1Am	2m	3m	4m	5m
4 Very Heavy	0.80<K≦1.00	When normally working with W.L.L. or near W.L.L.	1Am	2m	3m	4m	5m	6m

*Design for grade 2m in the FEM Regulation (FEM 9.511)

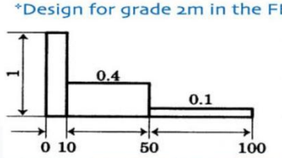

% operating time
Load spectrum 1

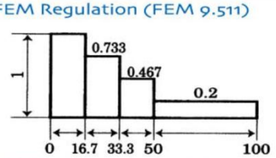

% operating time
Load spectrum 2

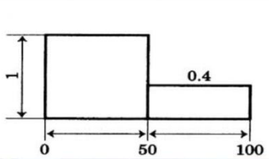

% operating time
Load spectrum 3

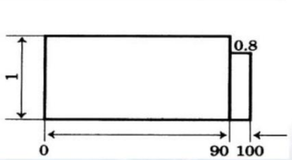

% operating time
Load spectrum

Plain Trolley

* Speed ratio of 4:1 clearly delineates between high speed and low speed, providing the precise load spotting capacities required in many applications.

* 110V control voltage for operator safety.

* The rugged aluminum alloy casting is engineered to withstand the rigors of repeated lifting cycles.

* Standard suspensions include Plain Trolley (PT), Low headroom Plain Trolley (LPT), Low headroom Geared Trolley (LGT) and motorized Trolley.

Low Headroom
Plain Trolley

Low Headroom
Geared Trolley

Rigid Top Hook

CHENG DAY MACHINERY WORKS CO., LTD.

Revision of September, 2007(Edition No.2) #950165
Due to the printing factors, the color of products is subject to minor deviation from the physical objects.

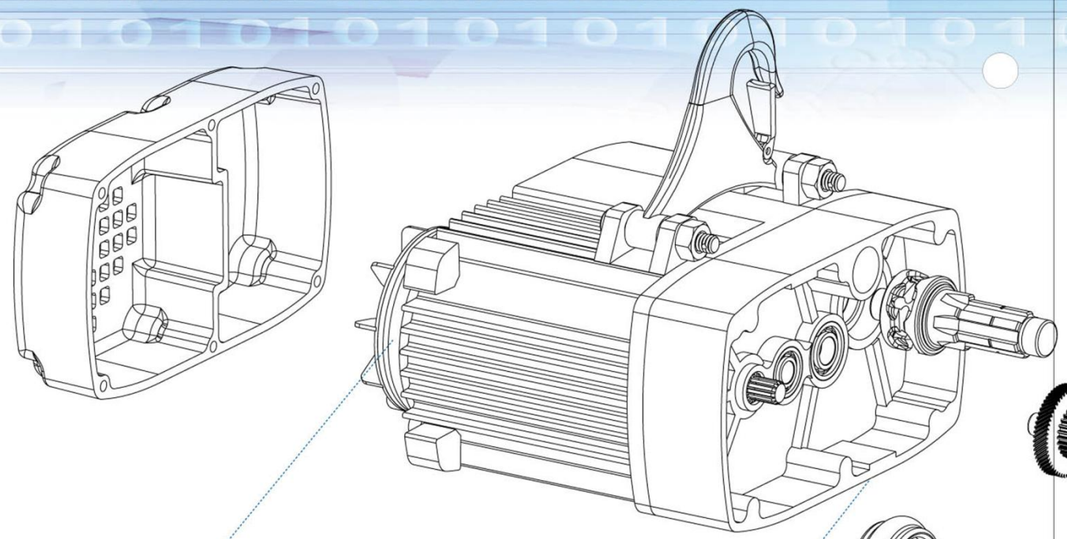

Motor and brake

* Cooling fins around motor permits 40% duty cycle.
* Total enclosed construction, withstands harsh conditions like those found in chemical, and electroplating environments.
* Standard IP54 enclosure; motor winding with class F insulation and thermal protection.
* Brake automatically engages in the event of a power failure.
* Long life asbestos free brake material.

Overload protection

* A slip clutch prevents the damage due to overloading.

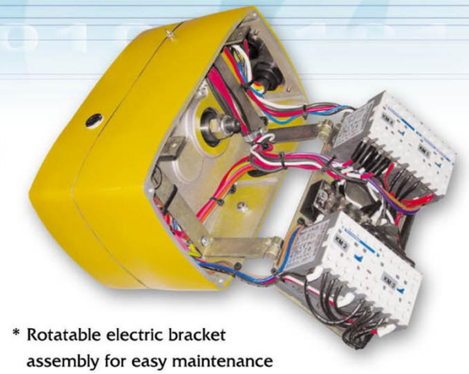

* Rotatable electric bracket assembly for easy maintenance and inspection.

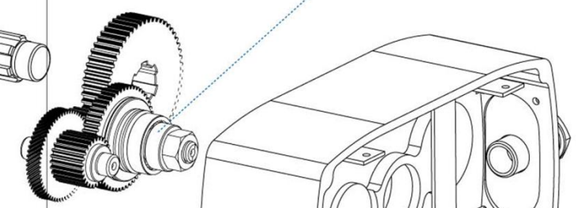

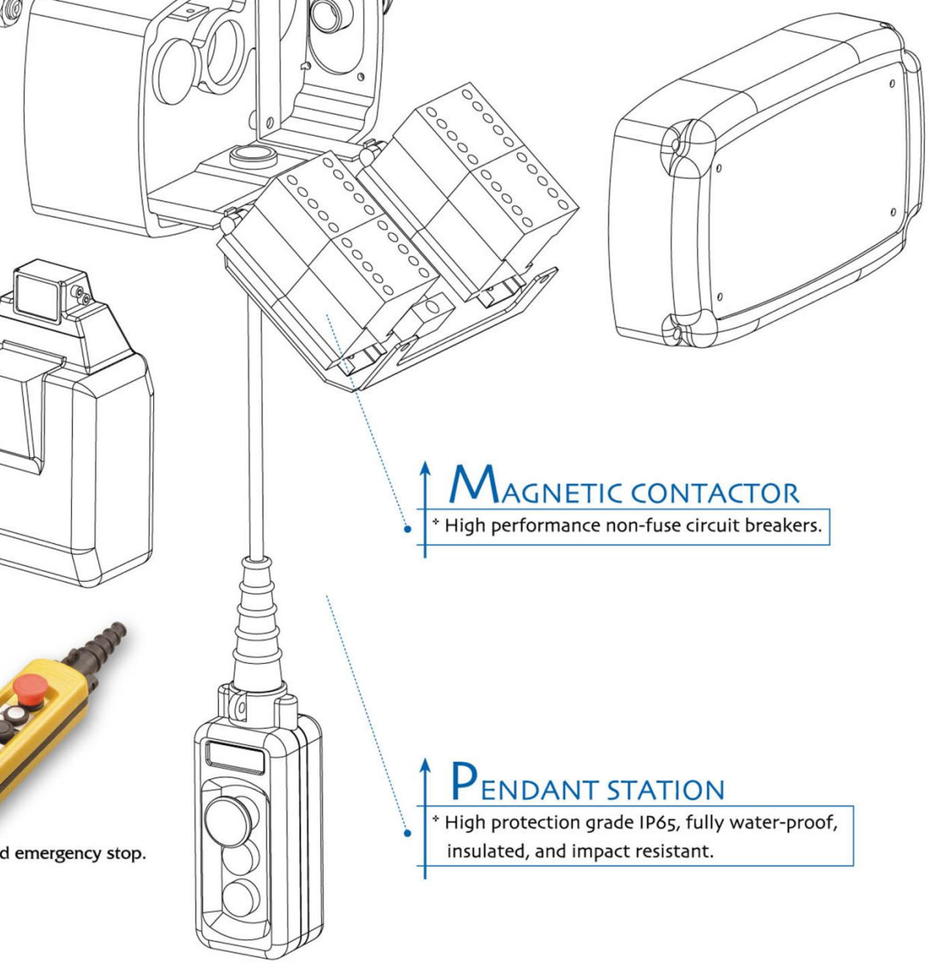

Limit Switch

* Upper and lower electrical limit switch.

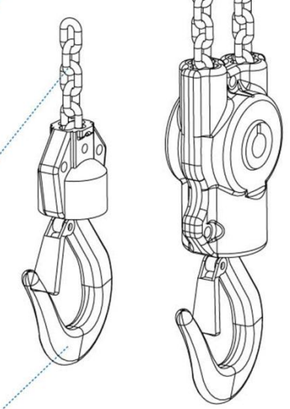

Load chain

* Grade 80 hardened and galvanized alloy steel chain, endures harsh conditions such as rain, saltwater and chemicals with minimal wear.

Hook

* Hot forged from high tensile steel.
* 360 degree rotation.

* Available with 2 or 4 buttons, plus standard emergency stop.
* Optional radio control available.

Magnetic contactor

* High performance non-fuse circuit breakers.

Pendant station

* High protection grade IP65, fully water-proof, insulated, and impact resistant.